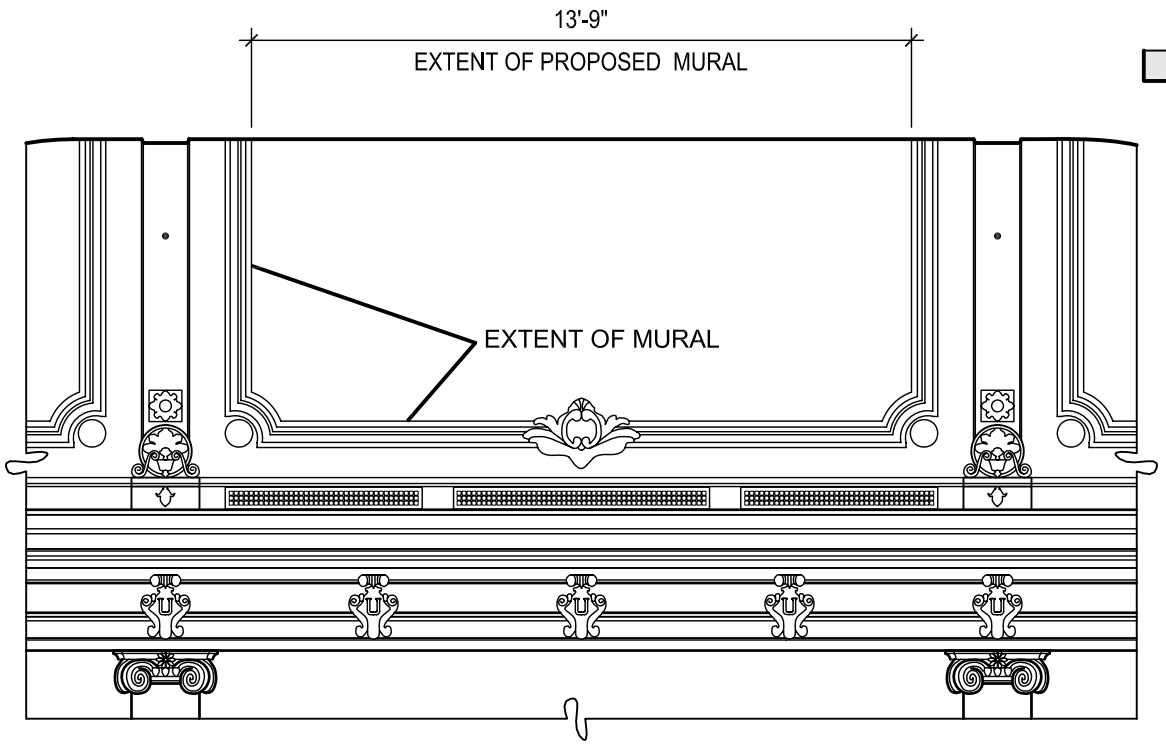

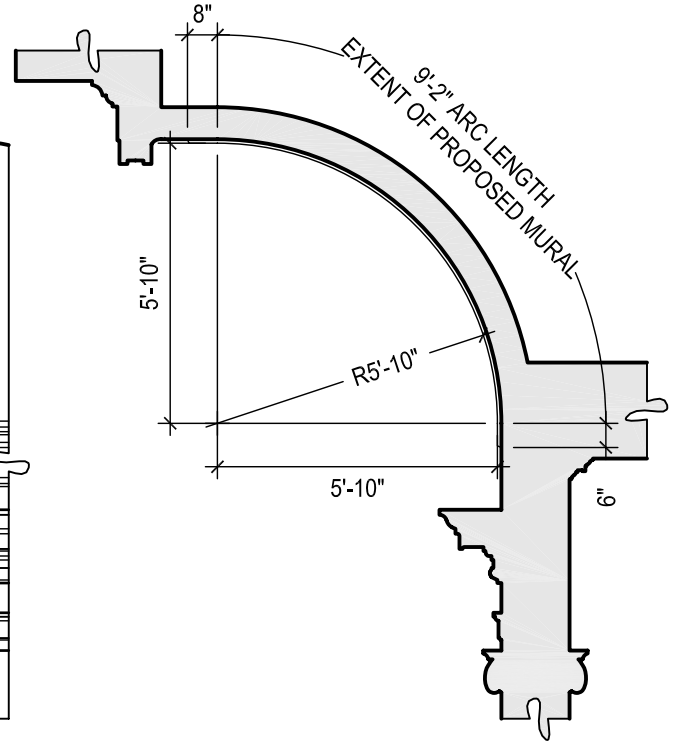

SENATE CHAMBER
COVE CEILING

SCALE: 1/4" = 1'-0"

0 2' 4' 8'

04/21/2006 09:55:44 AM, DLarm, 1:1

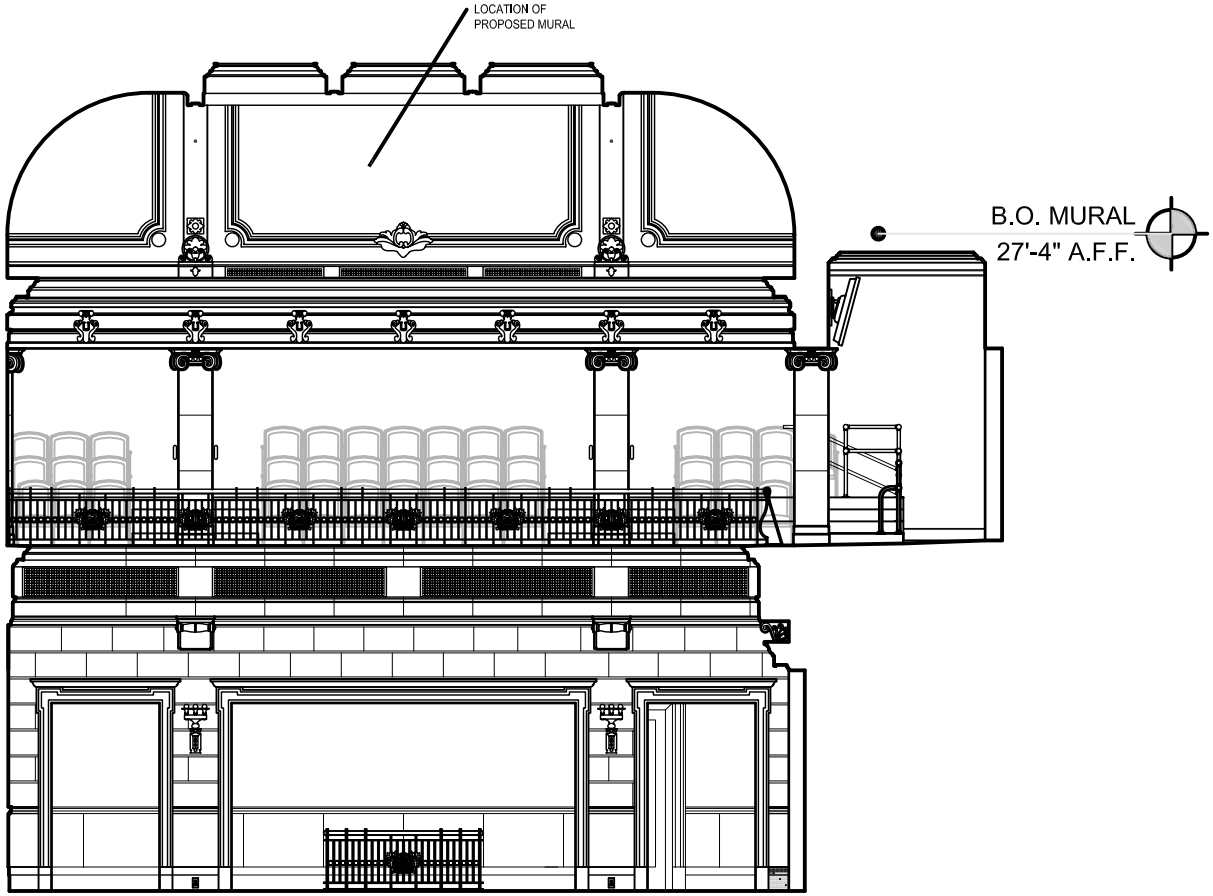

EAST INTERIOR ELEVATION
SENATE CHAMBER A324 (WEST SIMILAR)

SCALE: 1/8"=1'-0"

0 4'-0" 8'-0" 16'-0"

04/21/2006 09:56:34 AM, DLarm, 1:1

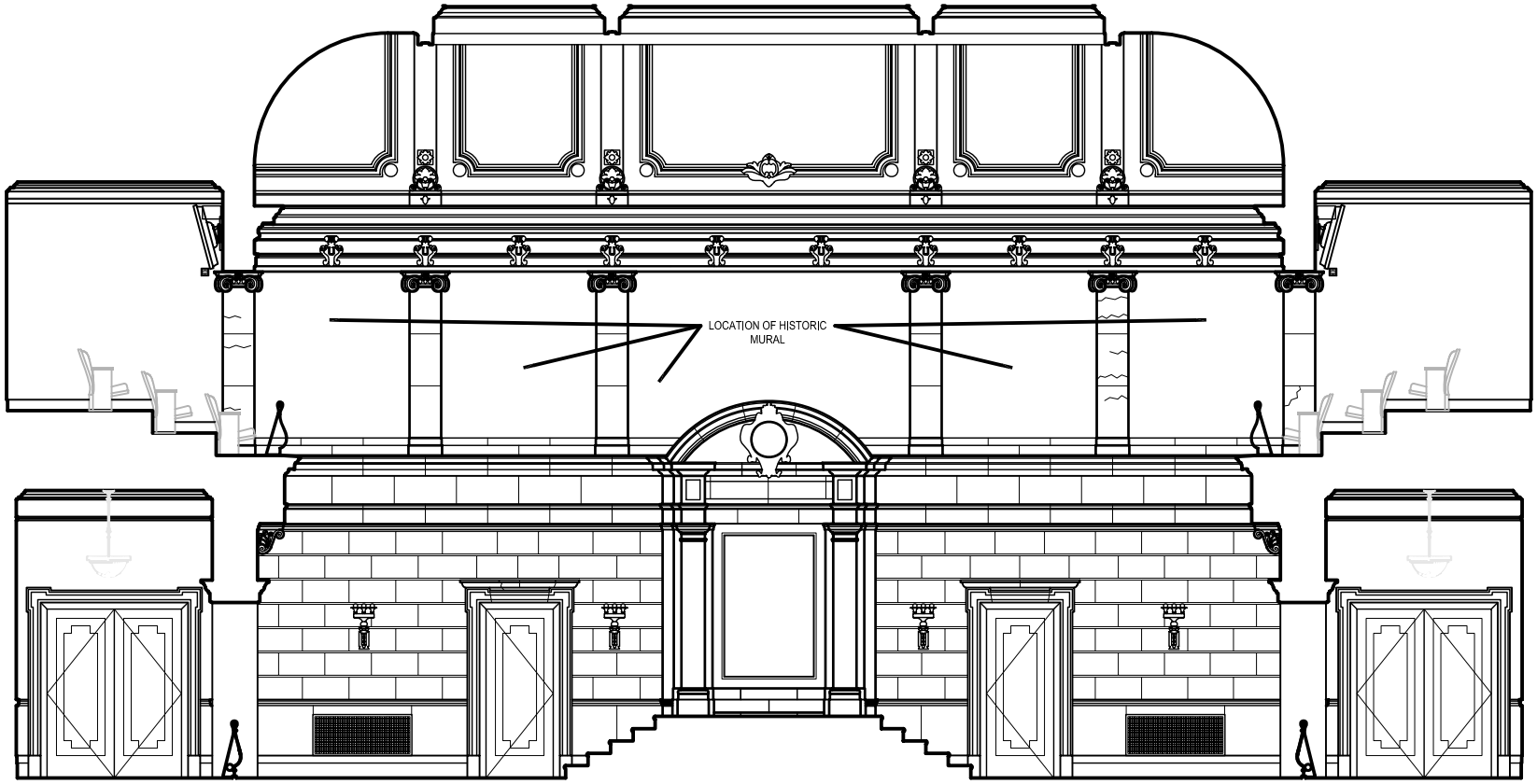

NORTH INTERIOR ELEVATION
SENATE CHAMBER A324 (SOUTH SIMILAR)

SCALE: 1/8"=1'-0"

0 4'-0" 8'-0" 16'-0"

04/21/2006 09:56:56 AM, DLarm, 1:1